ECHOMASTER

Handbrake Warning Alarm

The Echomaster **HWA-1** is a safety warning alarm designed to alert a driver that the handbrake has not been applied. The alarm will trigger when the door is opened on the vehicle without the handbrake being applied.

Key Features

- Positive and negative triggered handbrake compatible
- 97dB +/- 4dB at 4ft
- 12 and 24V compatible
- Clear audible warning

Benefits

- Requires no user activation – fully automatic
- Versatile compatibility by means of positive and negative triggers.
- Robust construction

Durability & Standards

- IP67
- E-Mark approved
- -40 to +85°C

BLACK	GND	WHITE	Door Switch (Negative)
RED	+12V ignition	BLUE	Handbrake (Negative)
ORANGE	+12V ignition* (see note)	YELLOW / GREEN (1)	Handbrake (Positive)

***Note**
Only connect orange wire when using the positive handbrake switch wire

echomaster@aampglobal-eu.com Call +44(0)1420 487110

EchoMasterEurope.co.uk Follow @EchoMasterEurope

Dimensions

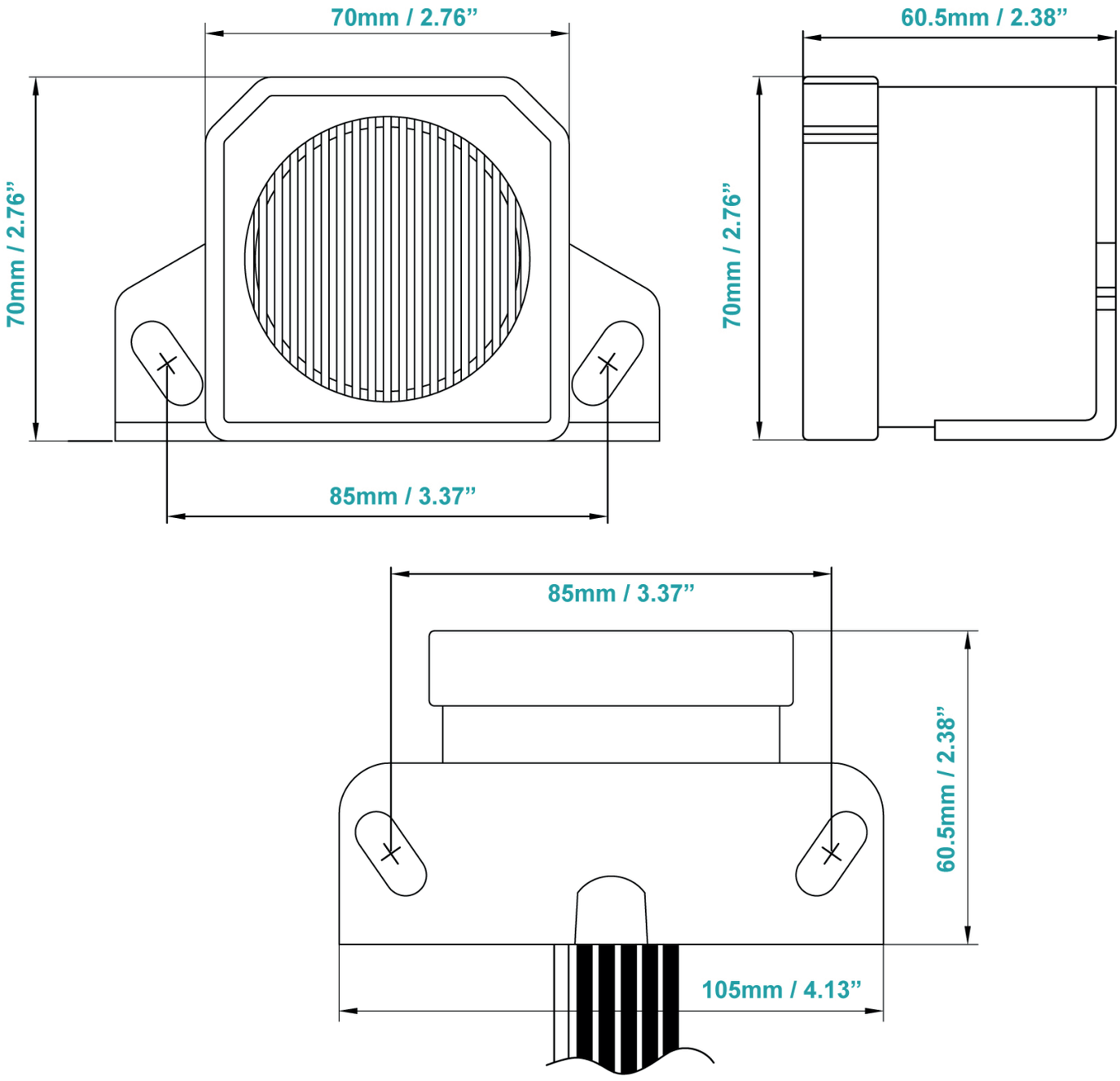
70mm / 2.76”
70mm / 2.76”
85mm / 3.37”
60.5mm / 2.38”
70mm / 2.76”
85mm / 3.37”
60.5mm / 2.38”
105mm / 4.13”